DOI: 10.13009/EUCASS2017-209

Conceptual Design of Self-Expanding/Folding Extremely Large Aspect Ratio Wing Airplane

Zhou Xiaopeng and Chen Haixin**
** School of Aerospace Engineering, Tsinghua University*
Beijing, China

Abstract
This paper puts forward the idea of self-expanding/folding wing and makes a preliminary conceptual design of extremely large aspect ratio airplane based on this idea. The expanding and folding process in flight is carried out by the movement of the rudder surfaces, the adjustment of distributed propulsion system and the active flight control technology. The preliminary conceptual design and performance analysis indicates that the extremely large aspect ratio airplane based on self-expanding/folding wing can obviously improve the airplane's airport runway adaptability, take-off and landing performance, keeping a high cruise lift-drag ratio, with acceptable increasing of take-off weight.

1. Introduction

1.1 Requirement for extremely large aspect ratio wing

Reducing drag has always been one of the first considerations in aircraft design process. The extremely large aspect ratio wing has great advantages in cutting down induced drag, which leading to widely applications in glider, long-endurance UAV, high-altitude launch aircraft and other aircrafts. Finding out a suitable configuration to carry out the extremely large aspect ratio wing, keeping the advantages and overcoming the shortcomings, is the focus of high-altitude long-endurance aircraft and other similar aircrafts design.

1.2 Implement methods of extremely large aspect ratio wing airplane

The increasing wingspan of conventional cantilever wings is limited by the conditions for take-off and landing of airport runways, poor flight conditions of lower atmosphere owing to unstable airflow, structural strength and rigidity of aircraft, and flight handling qualities. To solve these problems, concepts of extremely large aspect ratio/wingspan aircraft, carried out by wing tip coupling, strut-braced wing, dual/multi-fuselage, folding wing, telescopic wing, and other methods have been researched by researchers around the world.

1.2.1 Wing Tip Coupling: B-29B/F-84D

The US Air Force has tested the wing tip coupling technology in 1950. The project aimed to increase the range of airplanes by carrying fuel in hinged wing panels that supported themselves attached to their wing tips. The initial tests used a pair of jet fighters F-84D to simulate the hinged panels, towing on the wing tips of a giant bomber B-29A. [1]
An electronic autopilot has been planned to keep the F-84D level with the wing of the B-29A by deflect the ailerons and elevator. The airplane collided each other when the autopilot took over the manual operation. Unfortunately, the test evolved into an accident. The B-29A and F-84D collided in the air and crashed. The pilots and crew members sacrifice their lives to this experimental flight test.
The failure mainly caused by the poor performance of the autopilot at that age. The idea of wing tip coupling to increase the aspect ratio of the airplane in flight status is worth trying, especially when the flight control technology has been greatly developed today.

DOI: 10.13009/EUCASS2017-209

Figure 1: Wing Tip Coupling of B-29B/F-84D in flight [1]

1.2.2 Strut-braced wing

The Boeing SUGAR High configuration using a strut joins the fuselage and the extremely large aspect ratio wing. Analysis shows the configuration can achieve a 39% reduction in fuel burn compared to the SUGAR Free baseline on a 900nm mission. Benefits from wing weight reduction and aerodynamic improvements, the fuel burn reduction can achieve up to 58%. [2]

Figure 2: Boeing SUGAR High configuration [2]

Research done by Virginia Polytechnic Institute and State University shows the single-strut-braced wing aircraft with tip engines has a cruise L/D 24.4 with an aspect ratio of 10.3, and the single-strut-braced wing aircraft with under-wing engines has a cruise L/D 27.8 with an aspect ratio of 20.5. [3]

Figure 3: Strut-braced Wing model developed by Virginia Polytechnic Institute and State University [3]

1.2.3 Dual/multi-fuselage

The Global Flyer is a multi-fuselage extremely large aspect ratio wing airplane, which has a wing span of 114.2ft, wing aspect ratio 32, glide ratio 37 to 1. The max range is 18250nm at 45000ft, and mission endurance is 3.3 days. [4]

DOI: 10.13009/EUCASS2017-209

Figure 4: Virgin Atlantic Global Flyer Jet in flight [4]

1.3 Disadvantages of existing methods

For various reasons, the existing methods of the extremely large aspect ratio wing couldn't be widely used. The wing tip coupling is still too complicated for today's flight control computer. Three airplane's combination and separation process influenced muchly by the airflow condition. The strut-braced wing can't solve the runway limit problem if it is not folded at the ground state. The traditional folding wing need actuators therefore increase the empty weight and system complexity. The dual/multi-fuselage method need to solve more restrictions from the runway limit, because of the large landing gear spacing. New methods are required to make the extremely large aspect ratio wing airplane easy to use at normal airport.

2. Concept of self-expanding/folding wing

2.1 Different from traditional folding wings

The traditional folding wings are used in carrier-based aircraft, folding the wings only in ground state to reduce the space occupied by the aircraft.
The Lockheed-Martin folding wing concept put forward the idea folding the wing plane during flight. [5] This concept allows the plane changing wing area and aspect ratio to get different aerodynamics performance in order to suit different flight conditions. This concept is designed for unmanned fighter, the wing span is not very large, so the movement of wing plane can be driven by actuators.

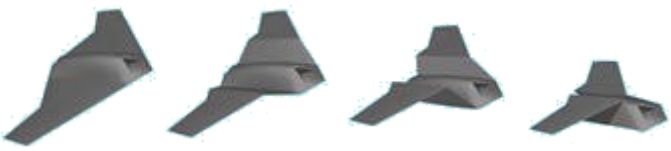

Figure 5: Lockheed-Martin folding wing concept [5]

The extremely large aspect ratio wing also could be folded in ground state, but if the folding and expanding motion are driven by actuators, the weight and volume of the actuators will be unacceptable for flight.
To solve this problem, this paper puts forward the idea of self-expanding/folding wing, using the aerodynamic force during flight to expanding and folding the large wing. To maintain balance of the airplane during the expanding and folding process, the expanding mode should be changed. For traditional folding wing, the outer wing rotates around the axis at the end of inner wing. The outer wing platform couldn't keep horizontal, so this mode can't be used during flight. The self-expanding/folding method using a moveable arm connect the inner and outer wings, therefore the outer wing can keep horizontal during flight. This change makes it possible to using aerodynamic force complete the expansion and folding process. The differences between this two mode are shown in the following graph.

DOI: 10.13009/EUCASS2017-209

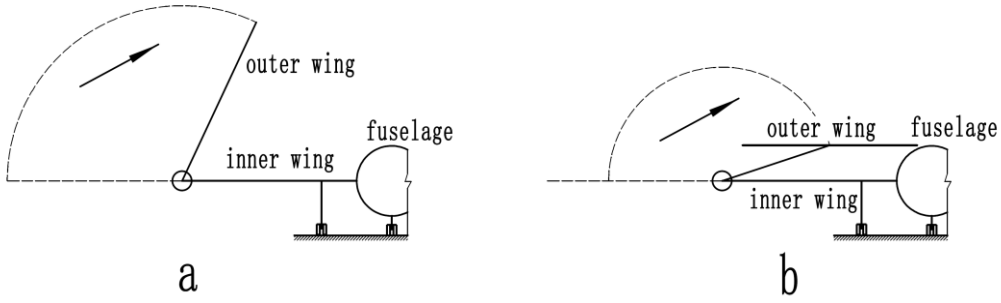

Figure 6: The differences between traditional folding wing and self-expanding/folding wing

2.2 Basic components of a self-expanding/folding wing-body

In a basic self-expanding/folding wing-body model, an inner fixed wing section is mounted to the fuselage on both side. A movable arm is used to attach the outer movable wing section and the inner fixed wing section. Twin engines are mounted to the movable wing section to make up a simplest distribution propulsion system. Control surfaces are also needed on the movable wing section to take part in the flight control.
The outer movable wing section need keep special attitude during the expanding/folding process, so one attitude sensor is needed to get flight attitude information.

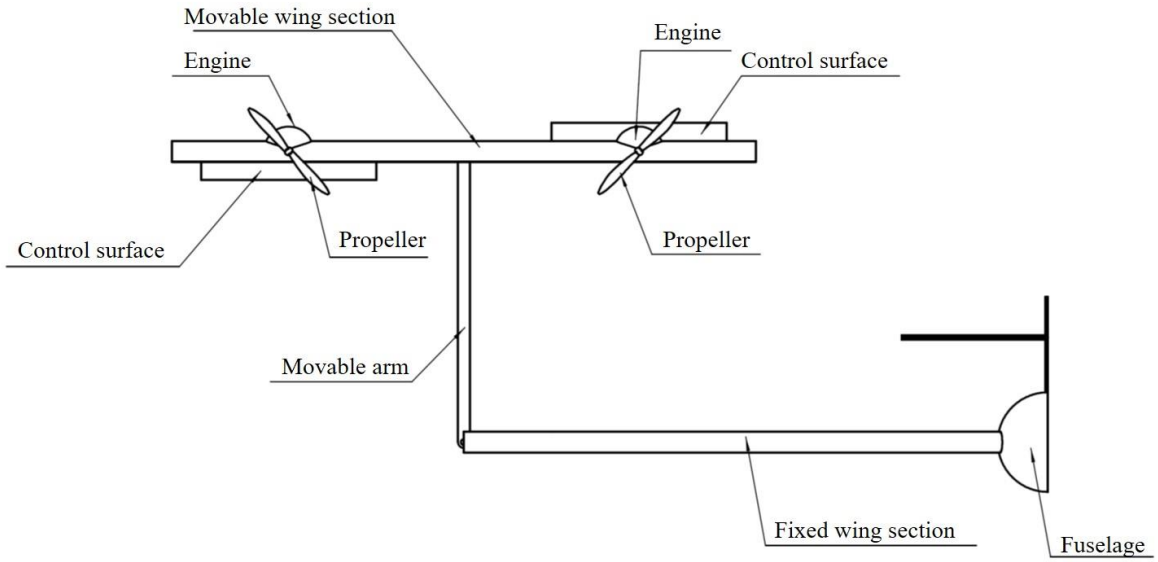

Figure 7: The front view of half self-expanding wing-body

DOI: 10.13009/EUCASS2017-209

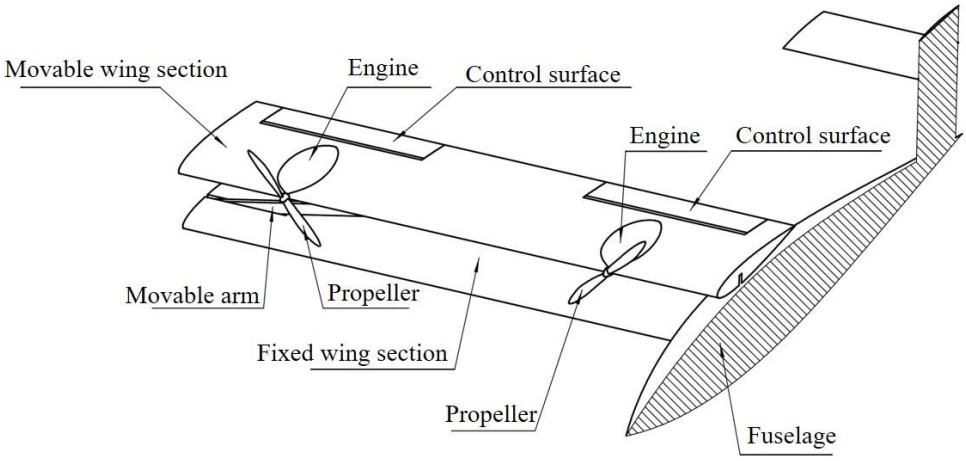

Figure 8: The isometric view of half self-expanding wing-body

2.3 The expanding/folding process

The expanding/folding process is shown in the following figure. During the process, the movable wing section is not exactly keep horizontal. In the first period, the control surfaces deflect differentially to produce the aerodynamic force pulling the movable wing section away from the fuselage. Then the control surfaces deflect into same direction to maintain the attitude of the movable wing section, until the movable wing section move to the highest point.
In the second period, the control surfaces deflect differentially to make the movable wing section incline, then the aerodynamic force draw the movable wing section down and outward. Accompanied with the changing position of the movable wing section, the control surfaces deflect in different angles.
In the ideal situation, the force applied to the movable arm which attached the movable wing section and the fixed wing section is very little. Control forces produced by control surfaces and the twin engines can balance the unexpected movements and forces.

DOI: 10.13009/EUCASS2017-209

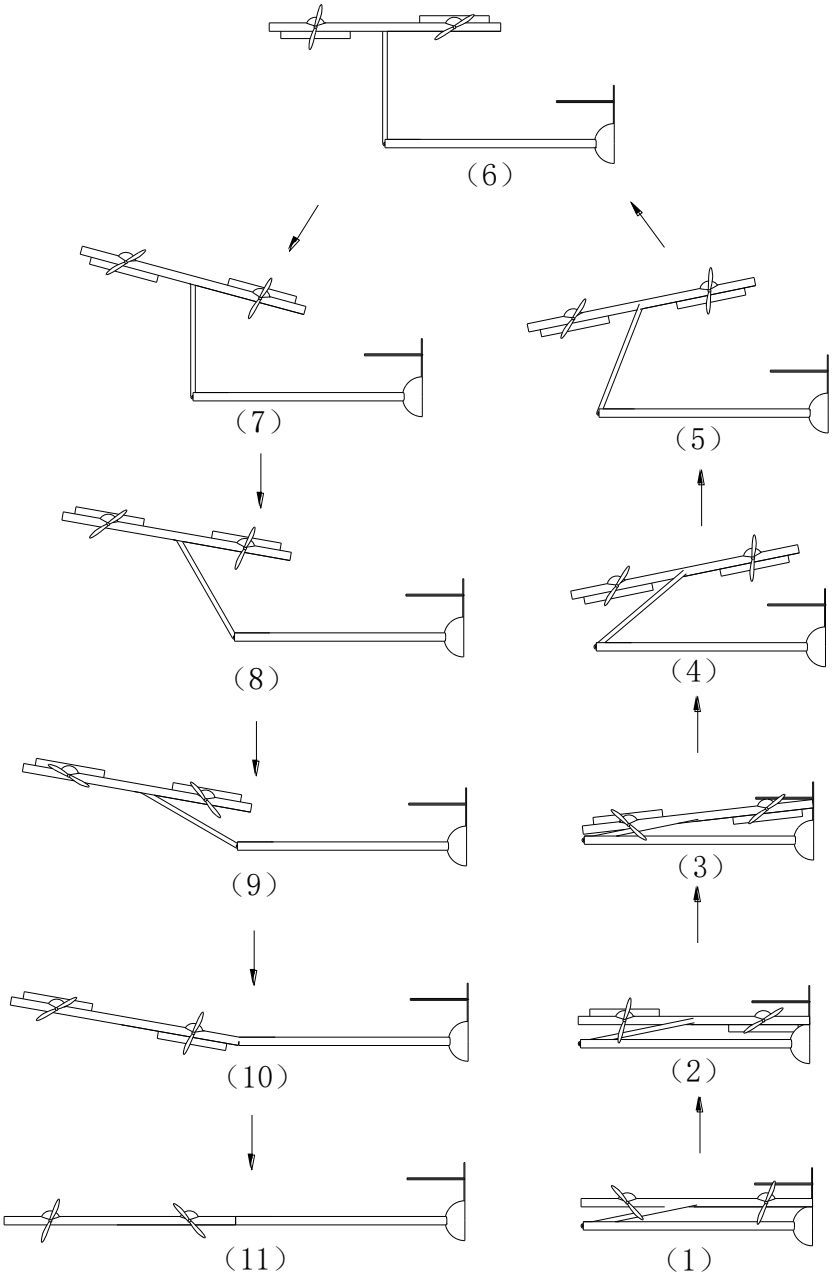

Figure 9: The schematic diagram of self-expanding process

2.4 Primitive shapes of an extremely large aspect ratio airplane based on self-expanding/folding wing

The Airbus A380 is the world's largest passenger airliner which has a wing span of 79.75 m. An airplane has a wing span more than A380 will restricted by the runway width and airport ground facilities, so a primitive shape has a wing span of 80 meters at folded state is researched. At expanded state, the wing span extend to 160 meters. The movable arm attached the inner wing and outer wing has a length of 20 meters. Along the wing span, 12 airscrews are arranged. The following graphs explain the expanding process.

DOI: 10.13009/EUCASS2017-209

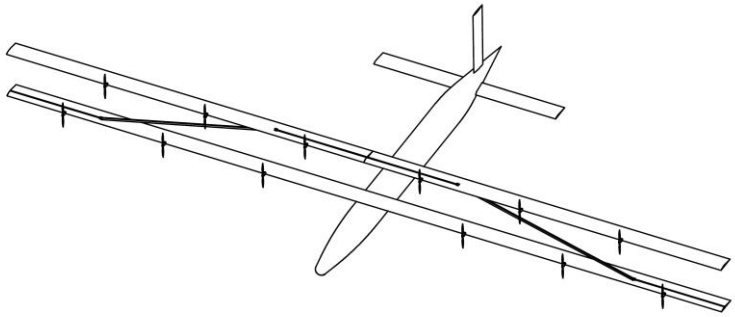

Figure 10: Folded state of an extremely large aspect ratio airplane based on self-expanding/folding wing

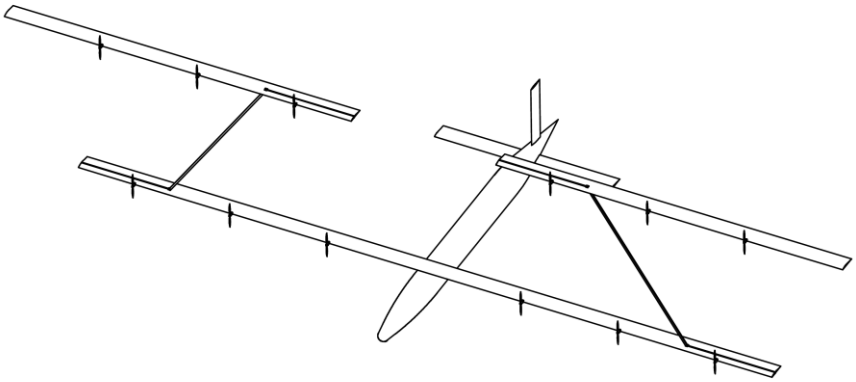

Figure 11: Expanding process 1 of an extremely large aspect ratio airplane based on self-expanding/folding wing

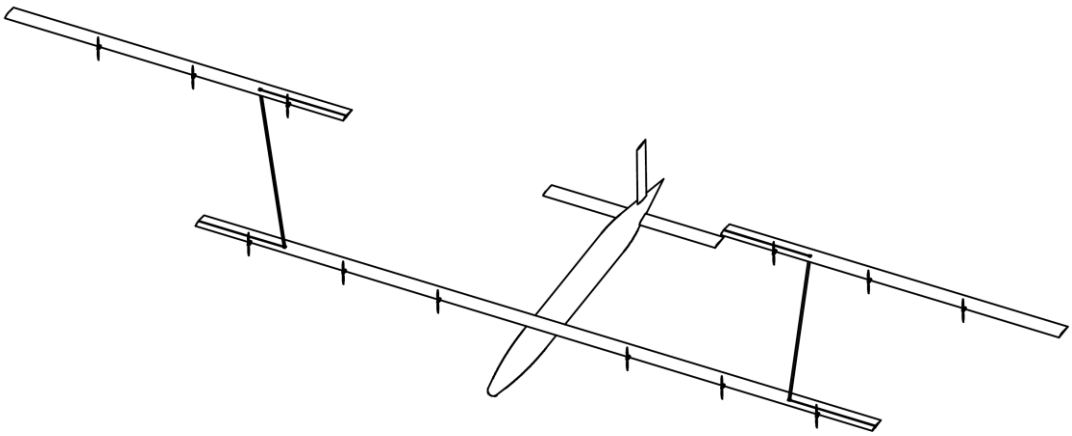

Figure 12: Expanding process 2 of an extremely large aspect ratio airplane based on self-expanding/folding wing

DOI: 10.13009/EUCASS2017-209

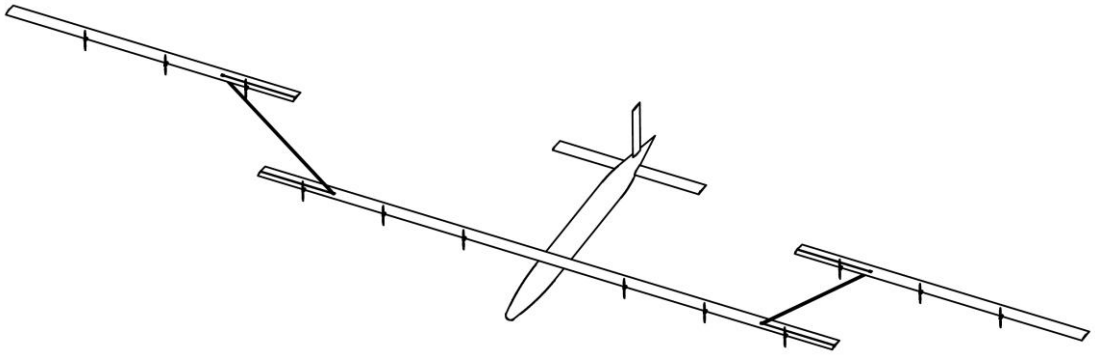

Figure 13: Expanding process 3 of an extremely large aspect ratio airplane based on self-expanding/folding wing

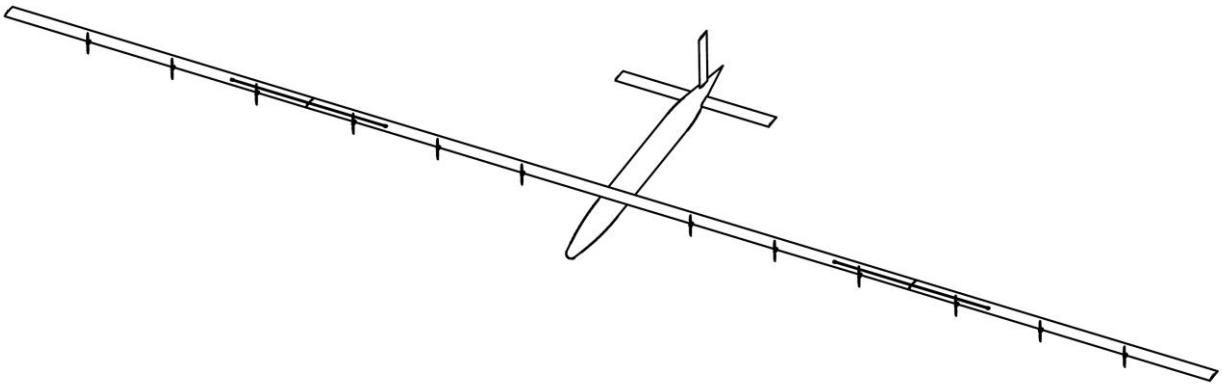

Figure 14: Expanded state of an extremely large aspect ratio airplane based on self-expanding/folding wing

3. Performance analysis

To find out the potential advantage of the self-expanding/folding wing, a case study is done based on the high altitude long endurance unmanned aerial vehicle RQ-4B Global Hawk. The wing span of modified shape at expanded state is twice of the prototype, thus the wing area and aspect ratio are twice of the prototype shape. A comparison is put out between the prototype, the expanded state of the modified shape and the folded state of it. The aerodynamic parameters are calculated by the USAF aerodynamics methodology software DATCOM. The weight and endurance are also estimated in the comparison.

DOI: 10.13009/EUCASS2017-209

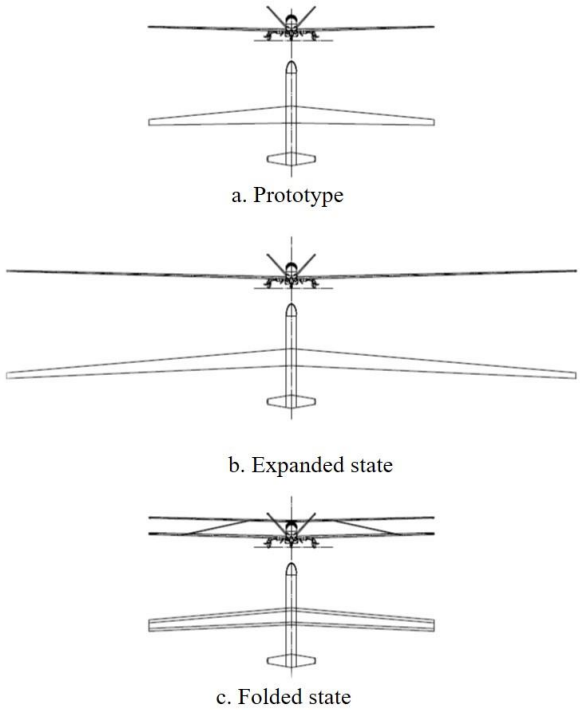

Figure 15: Self-expanding/folding wing based on RQ-4B

3.1 Qualitative analysis of the potential advantage

The extremely large aspect ratio airplane based on self-expanding/folding wing is a biplane in folded state and change to an extremely large aspect ratio monoplane at expanded state. So the airplane has different characteristics at expanded state and folded state.

3.1.1 Better airport and runway adaptability

At take-off, landing and ground maintenance status, the wings are folded, so the wing span is half of the cruise status. This characteristic makes the extremely large aspect ratio airplane suitable for the airports which can’t support giant aircraft.

3.1.2 Better take-off and landing performance than normal extremely large aspect ratio wing

The folded state is suitable for take-off and landing, to meet the runway width restrictions of lower airspace class. In folded state, the airplane has relatively lower roll inertia, wing plane close to the fuselage axis, which means more stable in airflow disturbance, and stronger weather adaptability than common large aspect ratio airplane.

3.1.3 High cruise lift-drag ratio than airplane which has same wing span

At expanded state, the large aspect ratio wings produce lower induced drag, and the use of smaller chord length can achieve the wing's laminar drag reduction, thereby significantly reducing the cruising drags.

3.2 High cruise lift-drag ratio

The lift-drag ratio of the three shapes are caculated by the software Datcom at the cruise Ma 0.54 and cruise altitude 18000 meters. The maximum lift-drag ratio of the expanded state is 44.0, about 1.6 times of the prototype 27.3. The maximum lift-drag ratio of the folded state is 22.3, lower than the prototype because of larger wing aera produce more friction drag. Although the folded state’s lift-drag ratio decrease, the lift coefficient is bigger at the same attack angle

DOI: 10.13009/EUCASS2017-209

than the prototype. So the modified shape can take-off at a lower attack angle, which means better take-off and landing performances.

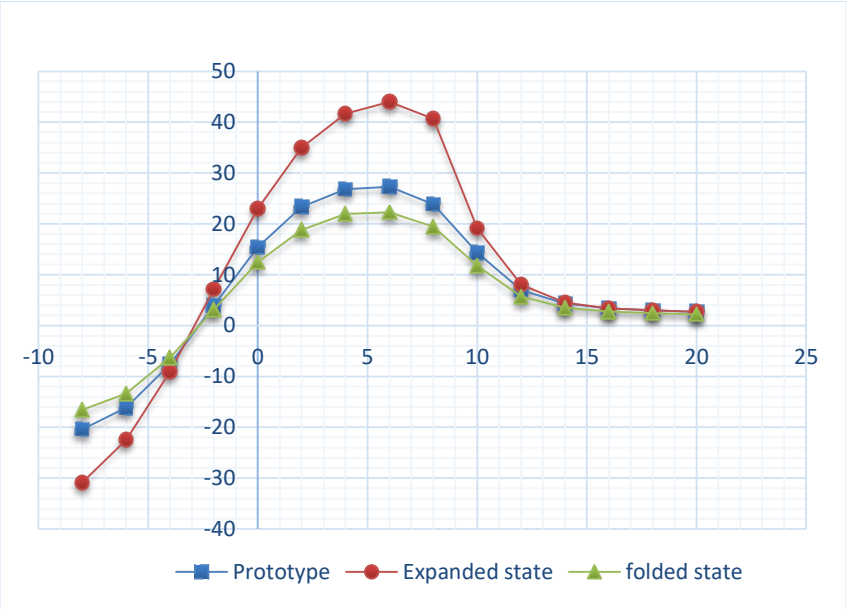

Figure 16: The comparison of lift-drag ratio between prototype and modified shapes

3.3 Increasing of take-off weight and endurance

The empty weight of the self-expanding/folding shape is increased from 5865 kg to 7314 kg due to the larger wing area, the movable arms, distribution propulsion engines, and strengthened wing structures. Assume the modified shape accommodate a same fuel weight as the prototype shape, the endurance of the modified shape can be calculated by the Breguet range equation. The endurance increased from 36 hours to 50.7 hours.

Table 1: The comparison of weight and endurance

		Prototype	Modified
Empty weight	kg	5865	7314
Fuel weight	kg	7403	7403
Payload weight	kg	1361	1361
Takeoff weight	kg	14629	16078
Cruise lift-drag ratio		27.3	44
Endurance	h	36	50.7

4. Key technical issues need to concern

4.1 Constraint and degree of freedom analysis

The fixed wing sections, the movable wing sections and the movable arms formed a multi-body dynamics system. The control variables applied on the movable wing section is less than the degrees of freedom, so it is necessary to add constraints using mechanical structure or under-actuated control system to the whole system.

4.2 Flight control laws of the movable wing section

Self-expanding/folding wing using aerodynamic force to drive the movement of the movable wing, which means the aerodynamic force on the movable wing couldn't contribute to the lift of the aircraft during the expanding/folding process. The flight control law should consider the reassignment of lift between the fixed wing section and the movable wing section.

DOI: 10.13009/EUCASS2017-209

4.3 Location of the movable arm analysis

The movable arm should be hidden in the wing structure when at expanded state to reduce the drag. So the hinge position of the movable arm should be chosen carefully to balance the wing structure weight and additional drag.

4.4 Distributed propulsion

Distributed propulsion technology uses a series of propellers or ducted fans distributed along the leading edge or trailing edge of an aircraft wing to improve low speed lift. This technology make the airplane needs a much smaller wing area, leading to higher cruise efficiency. NASA has tested Distributed Electric Propulsion (DEP) in some projects using a light aircraft [6]. Analysis and experiments indicates that DEP can improve total efficiency, reduce noise, increase reliability and safety, and greatly reduce system-level emissions.
For self-expanding/folding extremely large aspect ratio wing airplane, distributed propulsion is necessary for the control of movable wing section.

Figure 17: Distributed Electric Propulsion demonstrator concept [6]

5. Conclusion

The extremely large aspect ratio airplane based on the self-expanding/folding wing technology has a significantly enhance on the cruise lift-drag ratio, take-off and landing performance and can meet the airport facilities and runway width limits at the same time. This concept is suitable to apply to high-altitude long-endurance reconnaissance aircraft, and can also be applied to platforms such as transport aircraft, early-warning aircraft and tanker.

References

[1] Flying Aircraft Carriers of the USAF: Wing Tip Coupling: B-29B/F-84D, [Online] Available: http://www.air-and-space.com/Wing%20Tip%20Coupling%20B-29%20F-84.htm (June 14, 2017)
[2] Bradley, M. and Droney, C., “Subsonic Ultra Green Aircraft Research: Phase I Final Report,” NASA CR-2011-216847, April 2011.
[3] Grasmeyer, J. (2013). Multidisciplinary design optimization of a transonic strut-braced wing aircraft. AIAA Journal.
[4] Thomas, R., Thomas, D., & Karkow, J. (2015). Global Flyer Jet Drag Chute System. Aiaa Aerodynamic Decelerator Systems Technology Conference and Seminar.
[5] AIAA. (2000). Aeroelastic studies on a folding wing configuration - 46th aiaa/asme/asce/ahs/asc structures, structural dynamics and materials conference (aiaa).
[6] Borer, N. K., & Moore, M. D. (2015). Integrated Propeller-Wing Design Exploration for Distributed Propulsion Concepts. Aiaa Aerospace Sciences Meeting.